DEEPWATERWIND®

CLEAN ENERGY IS JUST OVER THE HORIZON

Block Island Wind Farm

DECOMMISSIONING

Sep, 2012

DEEPWATERWIND®

Decommissioning while being COO of Heerema

BP NW Hutton removal, North Sea Europe

NW Hutton decommissioning

BIWF decommissioning plan

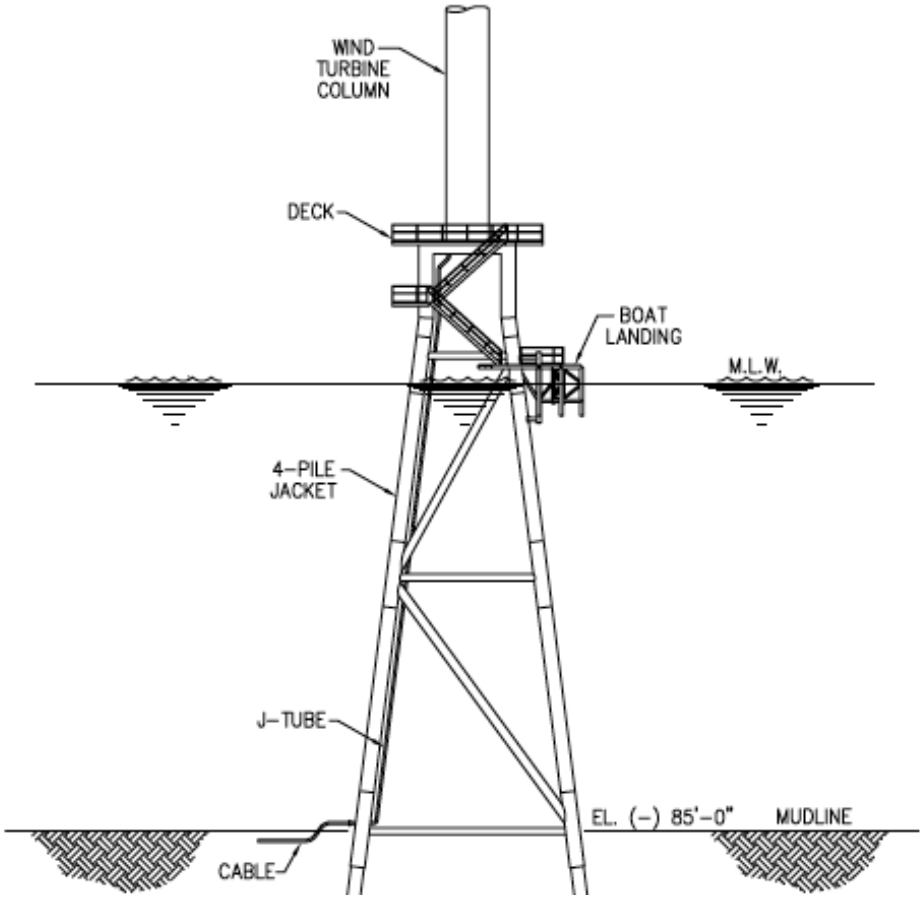

Removal of platform components

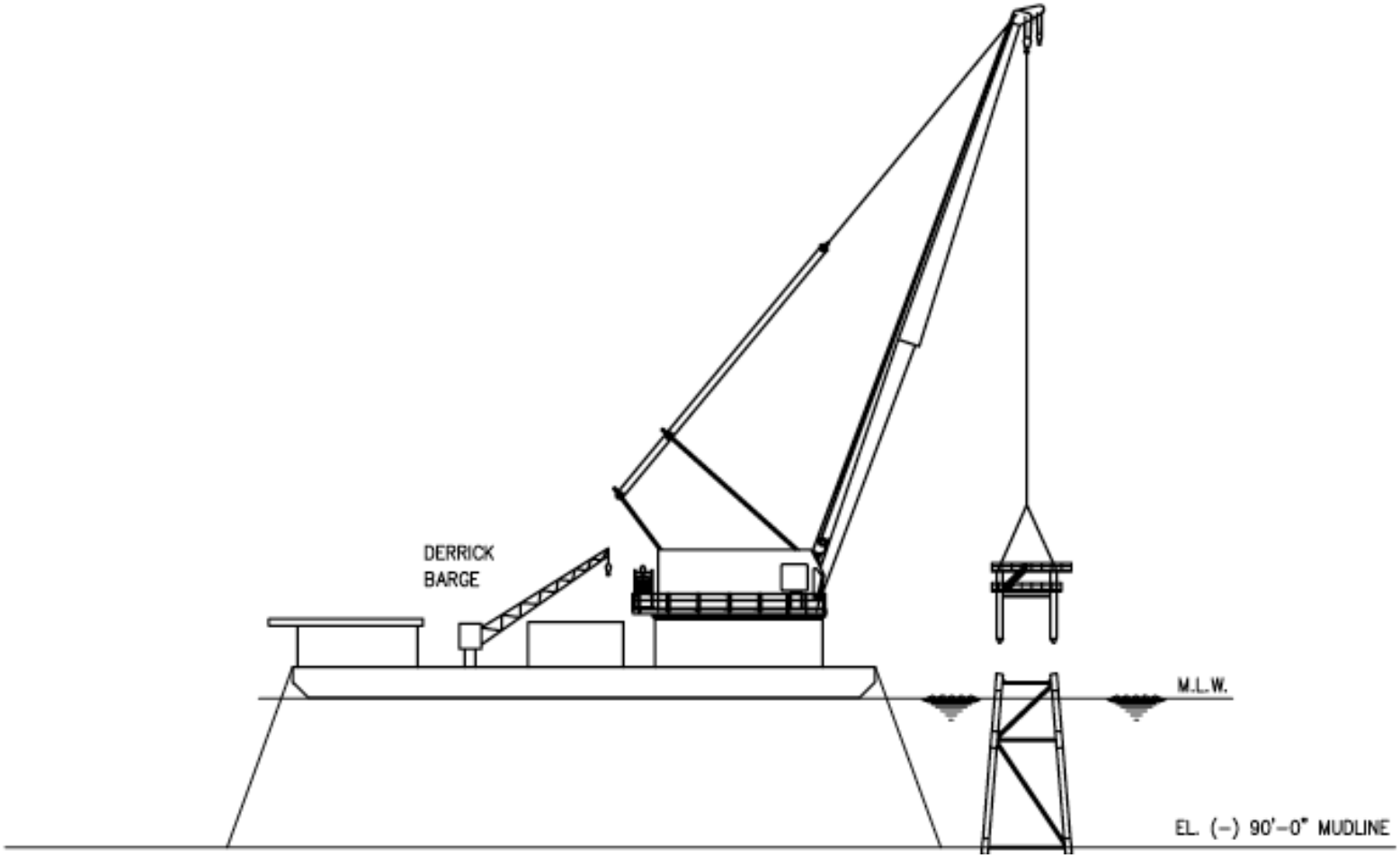

Pile cutting

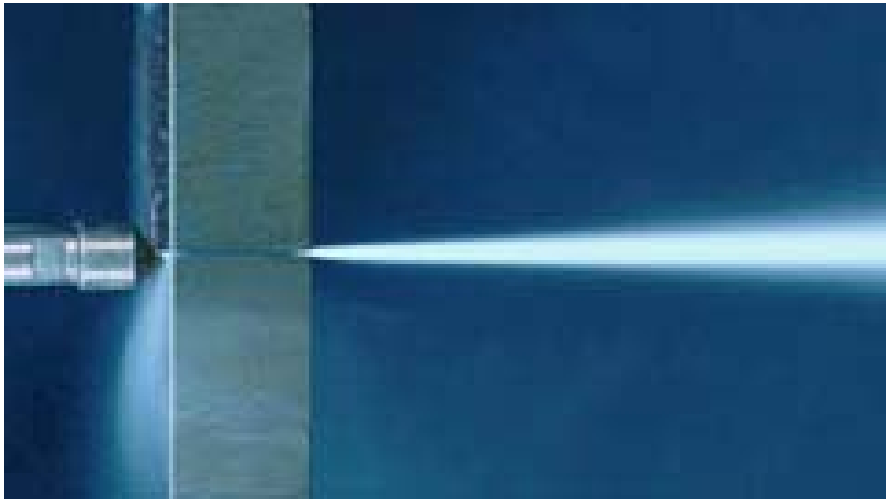

Decommissioning duration per turbine/foundation

DEEPWATER

preps and anchoring: 1 day

Remove blades and nacelle:
1 day

Remove tower:
1/2 day

Remove transition deck: 1/2 day

Cut piles and remove foundation: 2 days

Total 5 days per turbine/foundation

Decommissioning cost

		Million $
• Preparations		0.3
• Derrick barge mob/demob	14 days @100,000:	1.4
• Derrick Barge working	25 days @ 150,000:	3.75
• Transportation barges	45 days @ 20,000:	0.9
• Project Management		0.4
• Contingency		0.7
• Total decommissioning cost		7.45